**Container Components Europe Limited**

The world lid specialist

# MG1100RM-BSA DuraFlex® Lid
## With brushes for bottles or cans

Designed to fit 1100 L plastic & metal bins

***LIGHTWEIGHT - ROBUST - USER FRIENDLY - COST EFFICIENT***

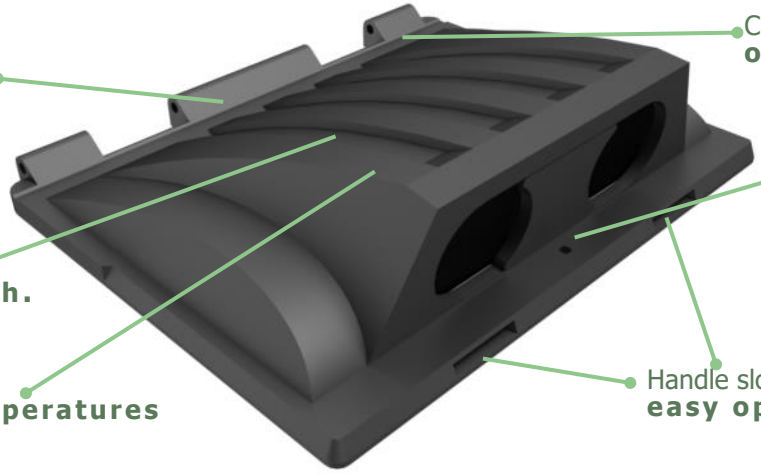


**With brushes for bottles or cans. To fit European 1100 ltr. containers.**

### OPTIONS

> Also available with a **rubber flap for paper (MG1100RM-FLA)** or **only an open aperture without flap or brushes (MG1100RM).**

### AVAILABLE ACCESSORIES

> **plastic hinge bar, plastic hinge adaptors** and **locks & keys.**

### MATERIAL

> Rotationally moulded from **UV-stabilized LMDPE; double-walled;** oil, chemical and frost **resistant; 100% recyclable.**

### COLOURS

> Available in **black** and a **wide variety of colours.**

## TECHNICAL DIMENSIONS

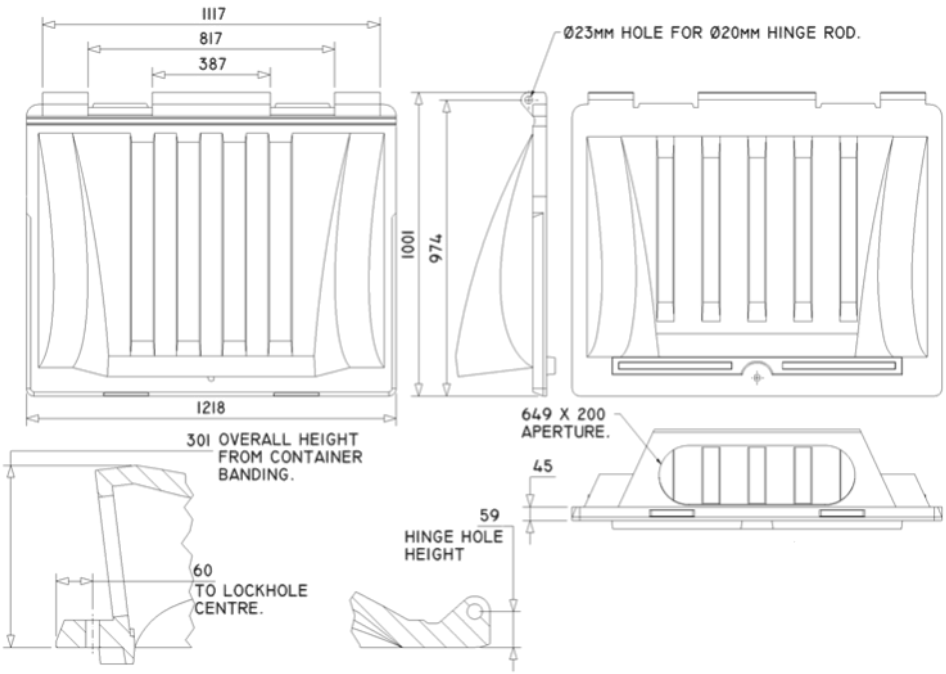


**enq@duraflexlids.co.uk — 0044 1246 853696**

**www.duraflexlids.co.uk**

ISO 9001 : 2015
ISO 14001 : 2015

Cert No. 8998